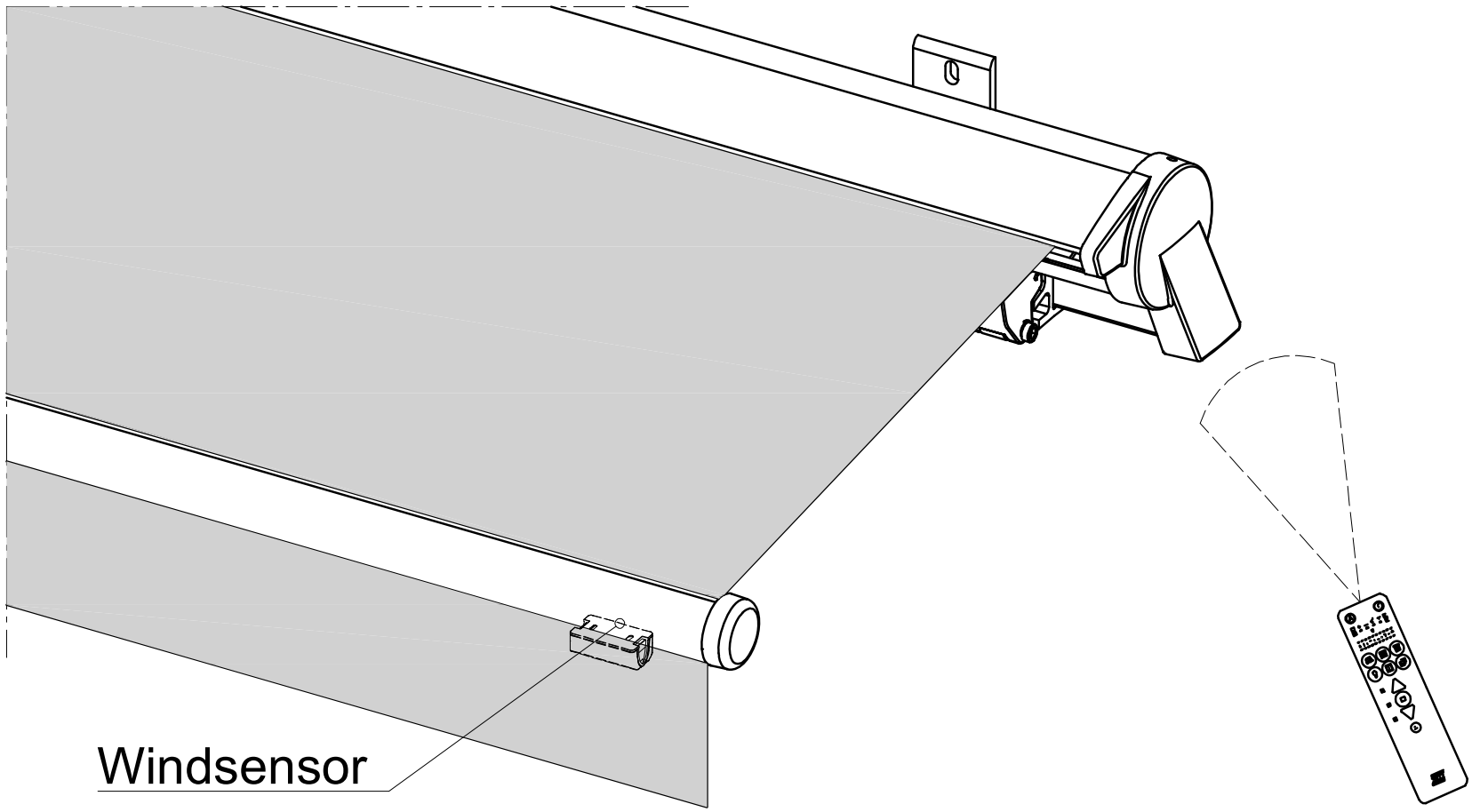
Windsensor